Calculation Cover Sheet

1. Document Title:		2. System Number:
Criticality Control Container (CCC) Carbon Steel Thermal Analysis		PT01
3. Document Number:	4. Document Revision:	5. Page:
CCO-CAL-0009	1	1 of 22

6. Summary Description

This analysis studies the impact of the proposed carbon steel fabrication option for the Criticality Control Container (CCC). The CCC serves as the particulate confinement boundary for the Criticality Control Overpack (CCO) payload container. The CCO payload assembly is credited for maintaining criticality and shielding safety in the TRUPACT-II (TP-II) and HalfPACT (HP) Safety Analysis Reports (SARs). This analysis compares the thermal performance of the tested and certified stainless steel CCC design against the proposed carbon steel CCC design. This comparison ensures that the CCO payload, with carbon steel constructed CCCs, loaded within the TP-II or HP packages, remains compliant with the thermal regulatory requirements prescribed in 10 CFR 71.

7. Software Usage

	Software Name	Version
1.	N/A	N/A
2.		
3.		
4.		

8. Preparer

Name	Signature	Date
Steve Porter	STEVEN PORTER (Affiliate)	Digitally signed by STEVEN PORTER (Affiliate) Date: 2025.12.03 11:21:35 -08'00'

9. Independent Reviewer(s)

Name	Signature	Date
Kyle Moyant	KYLE MOYANT (Affiliate)	Digitally signed by KYLE MOYANT (Affiliate) Date: 2025.12.03 14:00:42 -07'00'

10. Project Manager

Name	Signature	Date
Scott Burns	ROBERT BURNS (Affiliate)	Digitally signed by ROBERT BURNS (Affiliate) Date: 2026.01.12 10:40:31 -07'00'

11. QA Manager (or Designee)

Name	Signature	Date
Steve Tanner	David S. Tanner	Digitally signed by David S. Tanner Date: 2026.01.12 15:06:31 -07'00'

TABLE OF CONTENTS

1.0 INTRODUCTION 5

2.0 SUMMARY 9

3.0 METHODOLOGY 10

3.1 Method 10

3.2 Inputs 11

3.3 Significant Assumptions 14

3.4 Acceptance Criteria 14

4.0 ANALYSIS 15

4.1 NCT – Accessible Surface Temperature 15

4.2 NCT – Heat 15

4.2.1 MNOP 17

4.3 NCT – Cold 19

4.4 HAC 19

5.0 REFERENCES 21

6.0 COMPUTER RUNS 22

LIST OF TABLES

Table 3-1 Thermophysical Properties of Type 304 Stainless Steel (Table 2-1 of Ref. 6) 12

Table 3-2 Thermophysical Properties of Carbon Steel (Table 2-2 of Ref. 6).....13

Table 3-3 Optical Properties of Packaging and Payload Materials (Table 2-12 of Ref. 6) 14

Table 6-1 – Computer Run Listing 22

LIST OF FIGURES

Figure 1-1 HalfPACT Packaging without Payload.....5

Figure 1-2 Criticality Control Overpack Design 7

Figure 4-1 Simplified NCT Heat Flow Circuit 18

TABLE OF REVISIONS

Revision Number	Pages Affected	Revision Description
0	All	New Issue
1	11, 21	Revised References 1 and 2 to the latest revisions of the SARs and Reference 8 to drawing 163-009, Rev. 6.

1.0 INTRODUCTION

The TRUPACT-II (TP-II) [Ref. 1] and HalfPACT (HP) [Ref. 2] are U.S. Nuclear Regulatory Commission (NRC) approved Type B packages, Docket Nos. 71-9218 and 71-9279, respectively, for the transport of radioactive waste. They are designed for use by the U.S. Department of Energy (DOE) for the transport of Contact Handled Transuranic (CH-TRU) radioactive waste. The HP packaging is depicted in a quarter cutout view, with various components of interest labeled, in Figure 1-1. Note that the TP-II and HP packagings are effectively identical in design. The HP is essentially a 30-inch shorter version of the TP-II design, where the HP payload cavity can accommodate a single tier 55-gallon drum array (7-pack) and the TP-II payload cavity can accommodate two tiers of 55-gallon drum arrays (14-pack). Figure 1-1 depicts the major design components of the HP packaging, but is applicable to both packaging designs.

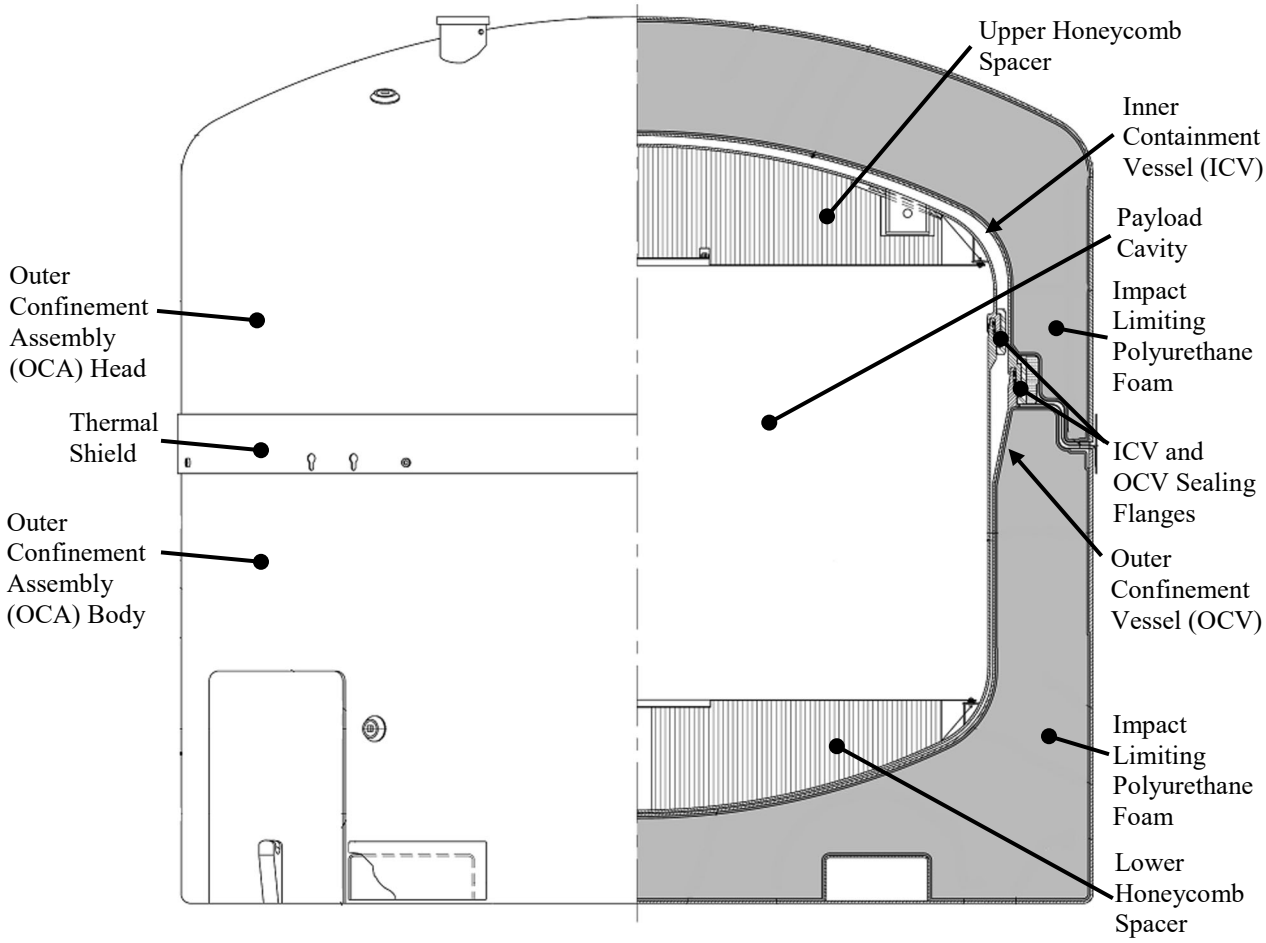

Figure 1-1 HalfPACT Packaging without Payload

The TP-II and HP packagings are described in further detail within their respective SARs [Ref. 1 and 2]. The TP-II and HP packages are designed to carry a variety of payloads within each of their payload cavities. The payloads include 55-gallon drums, 85-gallon drums, 100-gallon drums, Pipe Overpack Containers (POCs), Criticality Control Overpacks (CCOs), Standard Waste Boxes (SWBs), a Ten Drum Overpack (TDOP), or Shielded Containers (SCs). See the Contact Handled Transuranic Waste Authorized Methods for Payload Control (CH-TRAMPAC) [Ref. 4], Section 2.0, for further discussion and high level figures depicting the various approved payload containers.

The CCO payload container is of particular interest for this analysis. The CCO payload container design is depicted in Figure 1-2. The design includes the Criticality Control Container (CCC), which is housed and centered within a standard 55-gallon drum. The CCC is constructed of 6-inch schedule 40 pipe with 6-inch class 150 standard blind and slip-on flanges. The blind flanges serve as the bottom cap and lid, while the slip-on flange serves as the threaded means of joining the lid to the pipe body. The lid is fastened to the slip-on body flange via 8, ¾-inch heavy hex head cap screws, and sealed against the body flange with a ring gasket. Upper and lower plywood dunnage caps axially and radially center the CCC within the 55-gallon drum. The CCC serves as the credited particulate retaining boundary for the fissile content within the CCO. The dunnage caps and drum are credited for maintaining the geometric positioning of the CCC array within the payload.

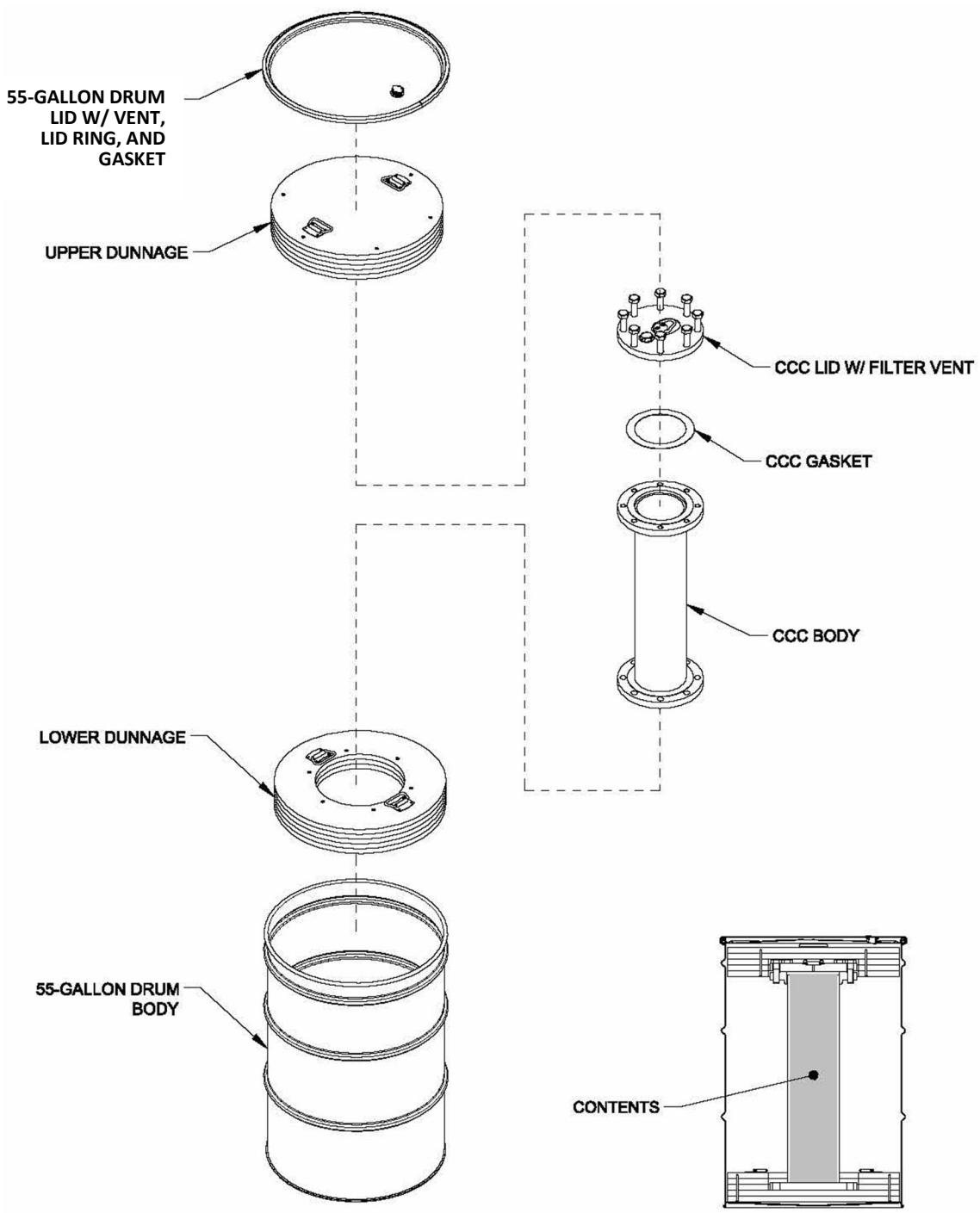

Figure 1-2 Criticality Control Overpack Design

The U.S Department of Energy (DOE) National Nuclear Security Administration (NNSA) at Savannah River Site (SRS) intends to ship up to 48.2[1] metric tons of Diluted Surplus Plutonium (DSP) to the Waste Isolation Pilot Plant (WIPP) [Ref. 7]. The CCO is the payload container selected to ship this waste to the WIPP, due to its combination of high fissile load limit and low cost. The estimated number of CCOs required to dispose of this waste is approximately 138,700[1] units. The original, certified design of the CCC is constructed of 304/304L stainless steel. See drawing 163-009 in the current approved revision of the TP-II [Ref. 1] and HP [Ref. 2] Safety Analysis Reports (SARs). In an effort to reduce cost and mitigate the risk of material market fluctuations, an option to construct the CCC of carbon steel has been added to the CCO SAR drawing [Ref. 8]. The purpose of this analysis is to thermally evaluate the CCC design when constructed of the proposed carbon steel for compliance with the requirements delineated in 10 CFR 71.

[1] Note that both the total amount of DSP waste intended for shipment to WIPP, and the estimated number of containers required to ship this waste, are in constant flux. Both values are provided to communicate the scale of waste and CCO units likely required, and thus the motivation behind the added option to fabricate of carbon steel. They are not intended to be precise estimates.

2.0 SUMMARY

The purpose of this section of the report is to provide a summary of the analysis results documented in Section 4.0. In summary, the maximum accessible external surface evaluation in Section 4.1, the NCT Heat evaluation in Section 4.2, the NCT Cold evaluation in Section 4.3, and the HAC evaluation in Section 4.4 all conclude that the proposed carbon steel CCC will have no or negligible impact on the original thermal results that are based on a CCC of stainless steel construction. Therefore, the proposed carbon steel design variant of the CCC will perform thermally equivalent to the originally certified stainless steel design, and the credited thermal safety function of the CCO payload in the TP-II and HP SARs will be maintained.

3.0 METHODOLOGY

3.1 Method

The payload specific thermal safety basis for the CCO is summarized in Appendix 4.6.4 of the CPA [Ref. 3]. The discussion and results come from the analysis documented in report CCO-CAL-0003 [Ref. 6]. For NCT, the methodology of the analysis was to use finite element/finite difference modeling to derive the temperature response of the package to various thermal cases. For HAC, the methodology of the analysis was to utilize the original certification fire testing results to extrapolate predicted temperature responses for the CCO. Note that the CCO payload total decay heat is limited to the packaging design total decay heats of 40 and 30 watts for the TP-II and HP, respectively. As a result, the payload does not challenge the packaging component thermal response beyond what is already assessed by the generic payload thermal analysis in Chapter 3 of each SAR. The temperatures of the packaging components that are included in the original CCO thermal analysis were provided for posterity, and confirm the conservative nature of the original generic payload thermal analysis.

For this analysis, the purpose is to assess the impact that the proposed carbon steel CCC [Ref. 8] may have on the thermal response of the original, certified, stainless steel design. The methodology for the evaluation is to screen for impact against the bounding regulatory thermal conditions in 10 CFR 71 [Ref. 5]. The regulatory thermal conditions may be subdivided into the following:

- Accessible Package Surface Temperature Limit (10 CFR §71.43(g))
  - Still air environment at 100°F, and
  - No solar insolation heat load, and
  - Maximum design decay heat load, and
  - No accessible surface of the package may exceed 185°F for an exclusive use shipment.
- NCT Heat (10 CFR §71.71(c)(1))
  - Still air environment at 100°F, and
  - Solar insolation heat load applied as specified in the CFR, and
  - Maximum design decay heat load.
- NCT Cold (10 CFR §71.71(c)(2))
  - Still air environment at -40°F, and
  - No solar insolation heat load, and
  - No decay heat load.
- HAC (10 CFR §71.73(c)(4))
  - Initial maximum package temperatures from NCT conditions, and
  - Any damage due to free drop and puncture tests are present, and
  - A fully engulfed hydrocarbon fire .

The analysis of impact on each thermal case is included in Section 4.0.

3.2 Inputs

The main inputs to this analysis are as follows:

- The revised CCO SAR drawing [Ref. 8].
- The original CCO thermal analysis [Ref. 6].
- The current SAR documents [Ref. 1, 2, 3, and 4]
- The ASTM material specifications for the CCC [Ref. 9-15].

The main strategy to justifying the proposed carbon steel construction of the CCC is via comparison with the certified stainless steel design's thermal performance. The material specifications for the currently certified CCC may be summarized as 304/304L stainless steel, as specified in SAR drawing 163-009 Rev. 5 [Ref. 1 and 2]. The proposed added material specifications for the CCC are included in SAR drawing 163-009 Rev. 6 [Ref. 8]. The new material specifications, for the purposes of evaluating thermal performance, may be generalized as carbon steel. The original CCO thermal analysis [Ref. 6] includes a comprehensive listing of thermophysical and optical property data in Section 2.0. Thermal and optical property data for both stainless and carbon steel are included. These properties are provided in Table 3-1, Table 3-2, and Table 3-3 for convenience. For data source references, see the original report.

Table 3-1 Thermophysical Properties of Type 304 Stainless Steel (Table 2-1 of Ref. 6)

Temperature (°F)	Density (lb/in^3)	Thermal Conductivity (Btu/hr/in/°F)	Specific Heat (Btu/lb/°F)
-100	0.2871	0.6211	0.1037
-40	0.2868	0.6547	0.1079
0	0.2865	0.6762	0.1105
70	0.2860	0.7167	0.1152
100	0.2858	0.7250	0.1159
150	0.2854	0.7500	0.1185
200	0.2850	0.7750	0.1210
250	0.2846	0.8000	0.1235
300	0.2842	0.8167	0.1247
350	0.2838	0.8417	0.1271
400	0.2833	0.8667	0.1287
450	0.2829	0.8833	0.1298
500	0.2825	0.9083	0.1314
550	0.2820	0.9250	0.1324
600	0.2816	0.9417	0.1335
650	0.2811	0.9667	0.1349
700	0.2807	0.9833	0.1359
750	0.2802	1.0000	0.1369
800	0.2798	1.0167	0.1372
850	0.2793	1.0417	0.1392
900	0.2789	1.0583	0.1394
950	0.2784	1.0750	0.1404
1,000	0.2779	1.1000	0.1417

Table 3-2 Thermophysical Properties of Carbon Steel (Table 2-2 of Ref. 6)

Temperature (°F)	Density (lb/in^3)	Thermal Conductivity (Btu/hr/in/°F)	Specific Heat (Btu/lb/°F)
-100	0.2849	3.0575	0.0909
-40	0.2846	3.0137	0.0952
0	0.2844	2.9819	0.0981
70	0.2840	2.9250	0.1029
100	0.2838	2.8917	0.1050
150	0.2836	2.8417	0.1079
200	0.2833	2.8000	0.1120
250	0.2830	2.7417	0.1150
300	0.2827	2.6917	0.1179
350	0.2823	2.6333	0.1213
400	0.2820	2.5750	0.1238
450	0.2817	2.5250	0.1258
500	0.2813	2.4583	0.1286
550	0.2810	2.4000	0.1309
600	0.2807	2.3333	0.1333
650	0.2803	2.2750	0.1361
700	0.2800	2.2167	0.1396
750	0.2796	2.1583	0.1433
800	0.2792	2.1000	0.1471
850	0.2788	2.0417	0.1581
900	0.2785	1.9833	0.1560
950	0.2781	1.9250	0.1597
1,000	0.2777	1.8667	0.1655

Table 3-3 Optical Properties of Packaging and Payload Materials (Table 2-12 of Ref. 6)

Material	Emissivity (ε)	Absorptivity (α)	Transmittance (τ)
Type 304 Stainless Steel (Interior)	0.25	-	-
Type 304 Stainless Steel (Exterior)	0.25	0.50	-
Alloy 6061-T6 Aluminum	0.15	-	-
Polyethylene (Black)	0.92	-	-
Polyethylene (Translucent Stretch Wrap)	-	-	0.75
Carbon Steel (Painted)	0.90	-	-
Plywood (Unpainted)	0.82	-	-
Nitrile Rubber	0.86	-	-

3.3 Significant Assumptions

There are no significant assumptions employed in this analysis.

3.4 Acceptance Criteria

The output of a SAR thermal analysis is generally utilized for two purposes; the first is to provide temperature inputs to downstream SAR analyses, and the second is to compare directly to material and regulatory temperature limits based acceptance criteria. For the purpose of determining the acceptability of a carbon steel constructed CCC, both downstream uses of the thermal analysis outputs must be considered. The acceptance criteria is summarized as follows:

- Compliance with the 10 CFR §71.43(g) accessible external surface of the package temperature limit of 185° for exclusive use shipments is maintained.
- Negligible or positive impact to the NCT cold, NCT hot, and HAC analyses.

4.0 ANALYSIS

The original CCO thermal certification safety basis is published in Appendix 4.6.4 of the CPA [Ref. 3]. The basis for the discussion and results come from the CCO thermal analysis report CCO-CAL-0003 [Ref. 6]. The following subsection evaluate the proposed optional carbon steel construction of the CCC for impact on the thermal safety basis of the original CCO design.

4.1 NCT – Accessible Surface Temperature

The regulatory package external accessible surface temperature conditions and limits are delineated in 10 CFR §71.43(g) [Ref. 5]. The regulations limit the maximum temperature anywhere on the external, accessible surface of the package to 122°F for nonexclusive use shipments, and 185°F for exclusive use shipments. Both the TP-II [Ref. 1] and HP [Ref. 2] are designed for exclusive use shipments. Consequently they are limited to the 185°F external, accessible package surface temperature limit when subjected to the regulatory conditions described in 10 CFR §71.43(g).

The regulatory limit on the external surface temperature, and the prescribed boundary conditions in assessing such a limit are, for the purposes of evaluating maximum NCT packaging and payload temperatures, non-limiting. This means that packaging and payload thermal properties, internal to the outermost surface of package, are largely negligible for this thermal case. The magnitude of total internal heat generation, external shape and orientation for the purposes of free convective film coefficient, and external optical properties, are the parameters of concern for evaluating compliance with this regulatory limit. Concentration and asymmetry of the internal heat generating source may also impact maximum external surface temperatures. However, previous thermal analyses have repeatedly observed the insensitivity of the TP-II and HP external surface temperatures to internal heat concentrations and asymmetry in the payload [Ref. 1, 2, 3, and 6]. In addition, no change is being proposed to the total, or individual, payload container decay heat maximums, nor is any change proposed for the packaging designs.

Therefore, the optional carbon steel construction of the CCC will have no impact on package compliance with the exclusive use accessible external surface temperature limit delineated in 10 CFR §71.43(g).

4.2 NCT – Heat

The package NCT Heat thermal conditions are delineated in 10 CFR §71.71(c)(1) [Ref. 5]. The package acceptance standards are prescribed in 10 CFR §71.43(f) and 10 CFR §71.51(a)(1). They require that the package components are able to operate normally under the NCT Heat conditions without impairing the safety or operability of the package. Thus, the implied limits to the NCT Heat conditions are that the maximum continuous operating temperature for the package materials must not be exceeded. In addition, the NCT regulatory limits prescribed for structural, criticality, shielding, and containment, are checked in subsequent analyses utilizing the temperature results of the thermal analysis as input.

A simplified thermal circuit of the heat flow and heat transfer mechanisms of the NCT CCO thermal analysis is depicted in Figure 4-1. Each text box represents a package component, heat generating source, or boundary condition. Each connection between text boxes, with or without a resistor symbol, represents a heat flow path between the package components. A connection with resistance symbolizes a thermal resistance and transfer mechanism, typically as conduction through air or radiation exchange between package component surfaces. A connection without a resistance symbol symbolizes intimate contact between components or the direct application of a boundary condition. The arrows on each connection depict the dominant heat flow path for the NCT Heat boundary conditions.

The three areas of note for this analysis in Figure 4-1 are circled in blue. These areas represent regions of the thermal circuit impacted by the optional change in material for the CCC to carbon steel. Those are the conductivity of the material of the CCC structure, and the radiation exchange between the CCC and both the 55 gallon drum and dunnage caps. All three regions of the circuit impacted by the proposed optional carbon steel CCC are enclosed within the CCO 55-gallon drum. The total maximum decay heat within the waste contained in the CCC remains unchanged, and all of the heat must pass through the 55-gallon drum enclosure of the CCO before exchanging with the ICV of the packaging. As a result, the 55-gallon drum of the CCO and all the packaging components in the circuit external to the CCO are unaffected by the CCC material change for NCT Heat conditions. Because of the location of the CCC in the payload and the predominant direction of heat flow for NCT Heat conditions, only the CCC and waste temperatures will be affected by the proposed material change.

The material conductivities for carbon steel and stainless steel are presented in Table 3-1 and Table 3-2, respectively. The conductivity of carbon steel is higher than stainless steel by a factor of 5 to 1.7, depending on temperature. For the purposes of modeling NCT Heat conditions, this is a favorable comparison as higher conductance leads to lower temperature differentials. However, the CCC material conductivity (0.75 Btu/hr/in/°F at 150°F) is orders of magnitude higher than that modeled for the internal heat generating waste (1.67E-3 Btu/hr/in/°F at 150°F) [Table 2-8, Ref. 6], the air within the cavity of the CCO between the CCC and 55-gallon drum (1.40E-3 Btu/hr/in/°F at 150°F) [Table 2-11, Ref. 6], or the plywood material for the dunnage caps (5.61E-3 Btu/hr/in/°F at 150°F) [Table 2-10, Ref. 6]. In addition, the thickness of the CCC body wall and flanges, at 0.280-inch and 1.00-inch [Ref. 8], respectively, when compared to the internal waste dimensions and external air cavity, further increases the comparative conductance through the CCC structure relative to the conductance internal or external to the component. Therefore, the increase in conductivity of the CCC structural material is expected to have a negligible impact on predicted CCC structure and waste temperatures for NCT Heat conditions.

The radiation exchange between the CCC, and both the 55-gallon drum and plywood dunnage caps, are also impacted by the optional change to carbon steel material. The dominant direction for radiation heat flow is radial, since the dunnage caps are opaque and are effective insulators to heat conduction in the axial direction. The optical properties utilized in the original CCO thermal analysis are presented in Table 3-3. The emissivity for a clean stainless steel surface is conservatively what was utilized to model the stainless steel CCC design in the original CCO thermal analysis. A higher emissivity leads to a lower temperature differential between the CCC

and 55-gallon drum. The emissivity of a painted carbon steel surface (0.90) is approximately a factor of 3.6 higher than a clean stainless steel surface (0.25). It is expected, then, that the painted carbon steel surface will result in lower maximum temperatures for the CCC and heat generating waste under NCT Heat conditions. However, given the temperature magnitudes (~150°F to ~170°F), and the 4th order temperature differential that drives radiation heat exchange, any benefit is likely small, if not negligible.

Therefore, a CCO with the proposed optional carbon steel CCC is bound by the original CCO NCT Heat thermal analysis results and safety basis.

4.2.1 MNOP

The maximum normal operating pressure (MNOP) is evaluated in Chapter 3.4.4 of each respective package design SAR [Ref. 1 and 2]. The MNOP for each package with a CCO payload is not directly evaluated in the CCO thermal analysis [Ref. 6]. Instead, linearized coefficients for determining the maximum temperatures of relevant regions of the package are derived and provided in the report. These values are subsequently utilized as input to the MNOP evaluation in each packages SAR. In each MNOP evaluation, the three contributors to internal pressure are radiolytic gas generation, the thermal expansion of gas, and water vapor pressure. All three are temperature sensitive and utilize the linearized temperature coefficients from the thermal analysis for derivation. The MNOP evaluation then ensures compliance with the 50 psig MNOP for both package designs.

Relative to the aforementioned MNOP inputs, all three have a positive correlation with temperature, i.e. as temperature rises, each parameter will increase in pressure contribution to the total pressure. As addressed in the discussion in Section 4.2, the proposed optional carbon steel material for the CCC has no impact on predicted NCT Heat temperatures for the CCO 55-gallon drum, or any of the packaging components external to the CCO. Therefore the coolest temperature of the ICV shell and the average ICV air cavity temperature, which effect the calculation of pressure increase due to water vapor and thermal expansion, respectively, are not impacted. For the radiolytic gas generation, that is affected by the waste temperatures within the CCO. The discussion in Section 4.2 concludes that the impact of a carbon steel CCC on NCT Heat conditions will be either negligible, or a small reduction to the temperature of the CCC and waste.

Therefore, a CCO with the proposed optional carbon steel CCC is bound by the original CCO MNOP evaluation.

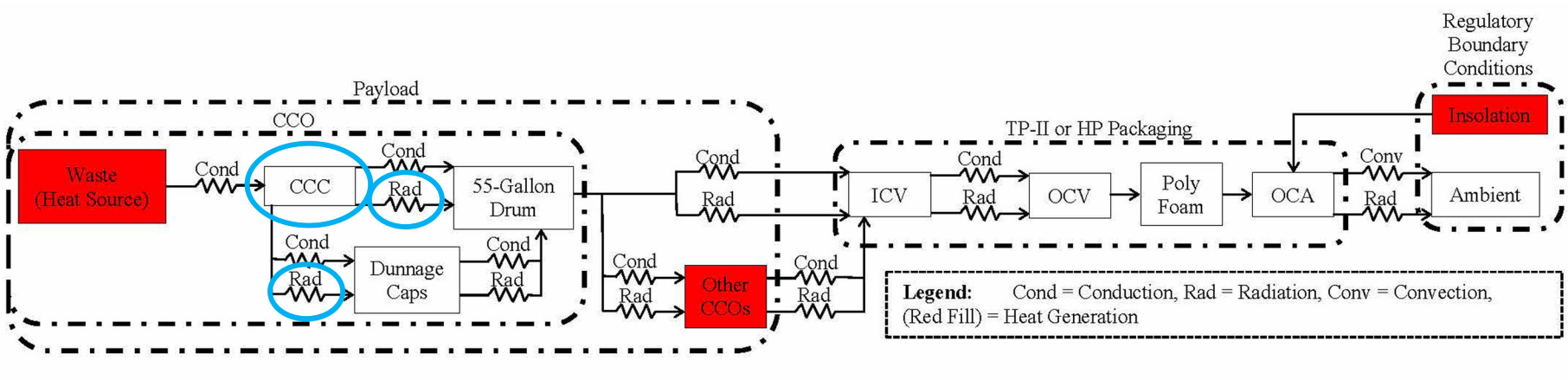

Figure 4-1 Simplified NCT Heat Flow Circuit

4.3 NCT – Cold

The regulatory NCT cold conditions are described in 10 CFR §71.71(c)(2). The case boundary conditions are specified as -40°F in still air, no insolation, and, implied for the purpose of deriving a bounding case, without internal heat generating load. The NCT Cold case represents the trivial thermal evaluation case since all package component temperatures, given enough time under the conditions described, will reach equilibrium with the environment at -40°F. As a result, material operating properties are screened to ensure a lower bound operating temperature of -40°F.

The main concern for the NCT cold conditions with regard to the optional carbon steel construction for the CCC is the potential for ductile to brittle transition behavior. This topic is addressed separately in a structural analysis supporting the proposed optional material for the CCC. Strictly for the purposes of thermal safety, there is no concern with regard to the optional carbon steel material being subjected to the -40°F temperature.

Therefore the CCO, with optional carbon steel CCC, will have no impact on the original CCO NCT Cold thermal safety basis.

4.4 HAC

The package HAC thermal conditions are delineated in 10 CFR §71.73(c)(4) [Ref. 5]. The package acceptance standards are prescribed in 10 CFR §71.51(a)(2), and require that a package design subjected to the HAC test conditions is able to maintain a prescribed level of leak tightness and maximum external dose rate. The normal operating functionality required under NCT conditions for the package components is not required under HAC conditions. Thus, the implied limits to the HAC conditions are that the maximum short duration operating temperatures for the package materials are maintained to ensure safety during an accident. In addition, the HAC regulatory limits for structural, criticality, shielding, and containment, are checked in subsequent analyses utilizing the temperature results of the thermal analysis as input.

The CCO HAC thermal evaluation results and discussion are published in Appendix 4.6.4 of the CPA [Ref. 3], and discussed in greater detail in Section 5.0 of the CCO thermal analysis report [Ref. 6]. The methodology utilized in the CCO HAC thermal evaluation was to conservatively estimate the response of the packaging and CCO payload using the available, measured HAC thermal test data. The original HAC pool fire test results for each package design, with generic payload, is in Chapter 3.5 of each respective SAR [Ref. 1 and 2]. The CCO HAC thermal evaluation utilized the initial and final HAC temperatures from testing, in combination with thermal mass property data, to compute the total thermal energies absorbed by each payload and packaging component during the HAC fire event. The total thermal energy absorbed by the payload was then proportionately distributed to each of the packaging components, and new, higher temperatures for the packaging components were derived. This is what is referred to in the report as the “no payload” package temperatures. The no payload package case represents a

conservative prediction of maximizing the anticipated packaging temperatures by eliminating the thermal mass of the payload within. The packaging thermal energies were then reapportioned again to account for the presence of the CCO payload mass, with the temperatures adjusted accordingly. For the CCO payload itself, the drum wall temperature was approximated by conservatively assigning it the same temperature as the maximum ICV wall bulk average temperature. The remaining components of the CCO internals were then proportionately adjusted to ascending temperatures the further inward the component is located, based on the temperature proportions observed via NCT modeling. The end results were conservatively estimated HAC CCO based package temperatures, with large margins of safety relative to each components temperature limit. See Table 4.6-5 and 4.6-6 of the CPA [Ref. 3] for the estimated CCO HAC package temperatures.

The proposed optional carbon steel construction of the CCC will have negligible impact on the aforementioned CCO HAC thermal analysis results. This statement is justified due to the methodology of the original CCO HAC thermal analysis outlined above. The basis for estimating the original CCO payload component temperatures is the “no payload” maximum ICV wall bulk average temperature, applied directly to the 55-gallon drum of the CCO. This is an upper limit, bounding average temperature since it is derived without any thermal mass in the payload. As a result, the original CCO HAC thermal analysis methodology is insensitive to a change in the material of construction for the CCC.

Therefore the proposed optional carbon steel CCC material is bound by the conservative CCO HAC methodology of the original certification analysis.

5.0 REFERENCES

Documents

1. U.S. Department of Energy (DOE), *TRUPACT-II Safety Analysis Report*, Revision 27, 2025.
2. U.S. Department of Energy (DOE), *HalfPACT Safety Analysis Report*, Revision 10, 2025.
3. U.S. Department of Energy (DOE), *CH-TRU Payload Appendices*, Revision 5, 2022.
4. U.S. Department of Energy (DOE), *CH-TRAMPAC*, Revision 6, 2022.
5. Title 10, Code of Federal Regulations, Part 71 (10 CFR 71), *Packaging and Transportation of Radioactive Material*, 2022.
6. Nuclear Waste Partnership, *Criticality Control Overpack Thermal Analysis*, CCO-CAL-0003, Revision 3, 2020.
7. National Academies of Sciences, Engineering, and Medicine, *Review of the Department of Energy's Plans for Disposal of Surplus Plutonium in the Waste Isolation Pilot Plant*, The National Academies Press, Washington, D.C., 2020.

Drawings

8. Salado Isolation Mining Contractors, *Criticality Control Overpack SAR Drawing*, 163-009, Revision 6, 2025.

Material Specifications

9. ASTM International, *Standard Specification for Forged or Rolled Alloy and Stanless Steel Pipe Flanges, Forged Fittings, and Valves and Parts for High-Temperature Service*, ASTM A182, 2010.
10. ASTM International, *Standard Specification for Chromium and Chromium-Nickel Stainless Steel Plate, Sheet, and Strip for Pressure Vessels and for General Applications*, ASTM A240, 2019.
11. ASTM International, *Standard Specification for Seamless, Welded, and Heavily Cold Worked Austenitic Stainless Steel Pipes*, ASTM A312, 2017.
12. ASTM International, *Standard Specification for Carbon Steel Forgings for Pressure Vessel Components*, ASTM A266, 2011.
13. ASTM International, *Standard Specification for Carbon and Low-Alloy Steel Forgings, Requiring Notch Toughness Testing for Piping Components*, ASTM A350, 2018.
14. ASTM International, *Standard Specification for Pressure Vessel Plates, Carbon Steel, for Moderate- and Lower-Temperature Service*, ASTM A516, 2017.
15. ASTM International, *Standard Specification for Seamless and Welded Steel Pipe for Low-Temperature Service and Other Applications with Required Notch Toughness*, ASTM A333, 2018.

6.0 COMPUTER RUNS

Table 6-1 – Computer Run Listing[2]

Software	Name/Description/Run Time and Date/Machine Name	File Type	File Name
N/A	N/A	N/A	N/A

[2] The files listed in this table are electronically attached to this document in the document management system.